**BLAUPUNKT** AUTORADIO

Bosch Telecom

# CM 62
7 641 470 510

3D92 240 001 BN 0192

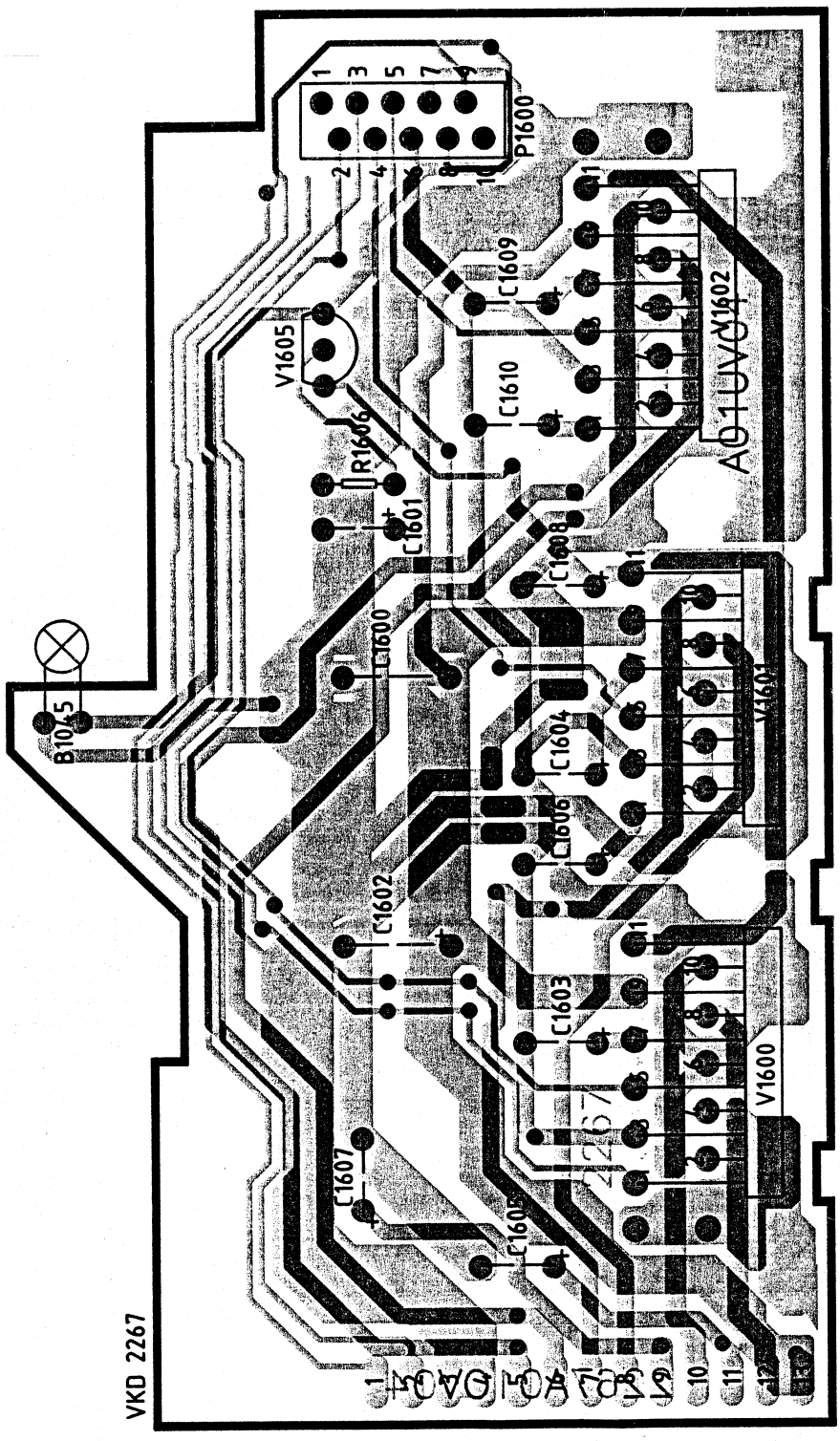


P1600
- 2 = LF
- 3 = RF
- 4 = LR
- 5 = RR
- 6 = Masse
- 7 = U14
- 8 = SDA
- 9 = SCL

DV1610
- 1 = SCL
- 2 = SDA
- 3 = Masse
- 4 = Masse
- 5 = RR > 20W
- 6 = RR > 20W
- 7 = LR > 20W
- 8 = LR > 20W
- 9 = RF-
- 10 = RF
- 11 = LF-
- 12 = LF
- 13 = UD

Blaupunkt-Werke GmbH
Bosch Telecom

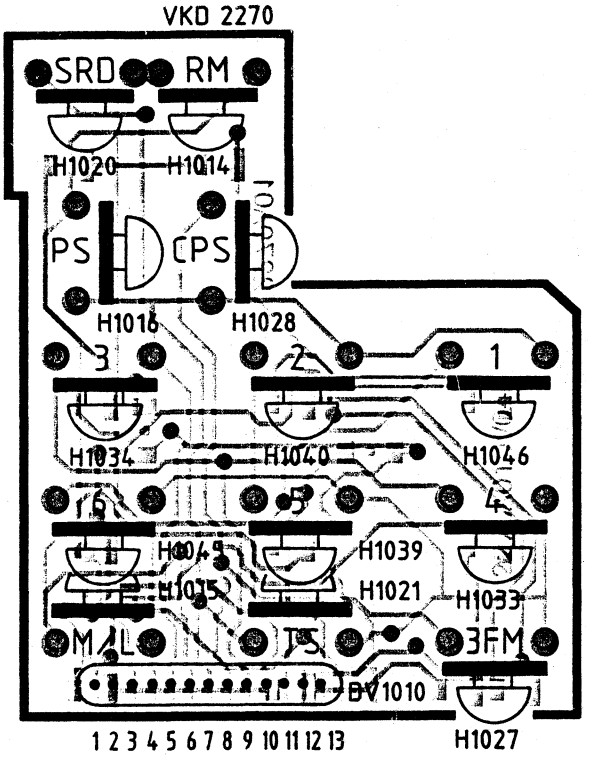
VKD 2270
SRD
RM
H1020
H1014
PS
CPS
H1016
H1028
3
2
1
H1034
H1040
H1046
6
5
4
H1039
H1021
H1033
M/L
3FM
BV1010
1 2 3 4 5 6 7 8 9 10 11 12 13
H1027

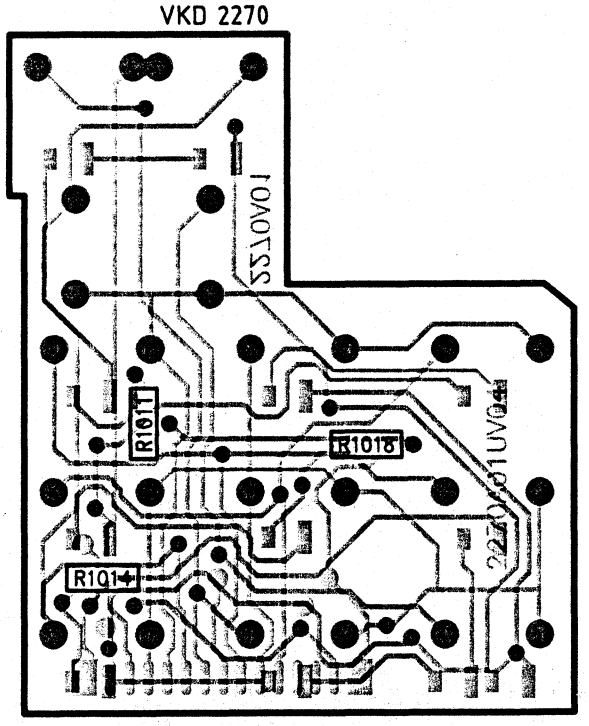
VKD 2270
R1018
R1014

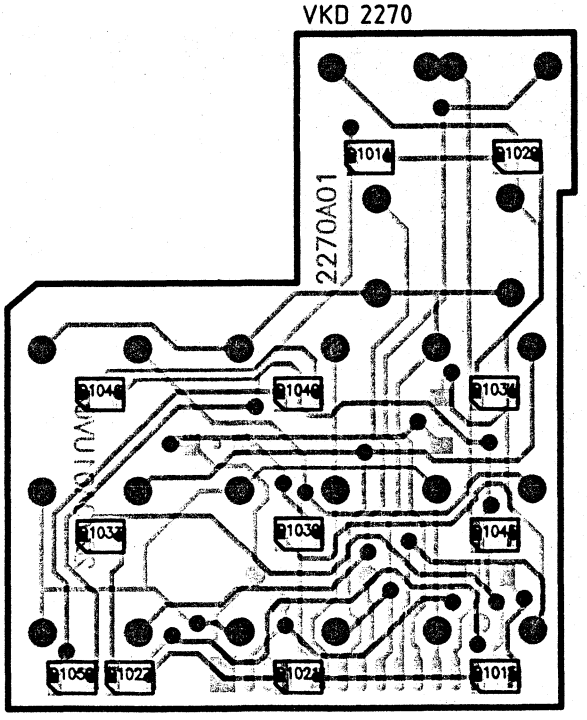
VKD 2270
2270A01

VKD 2268

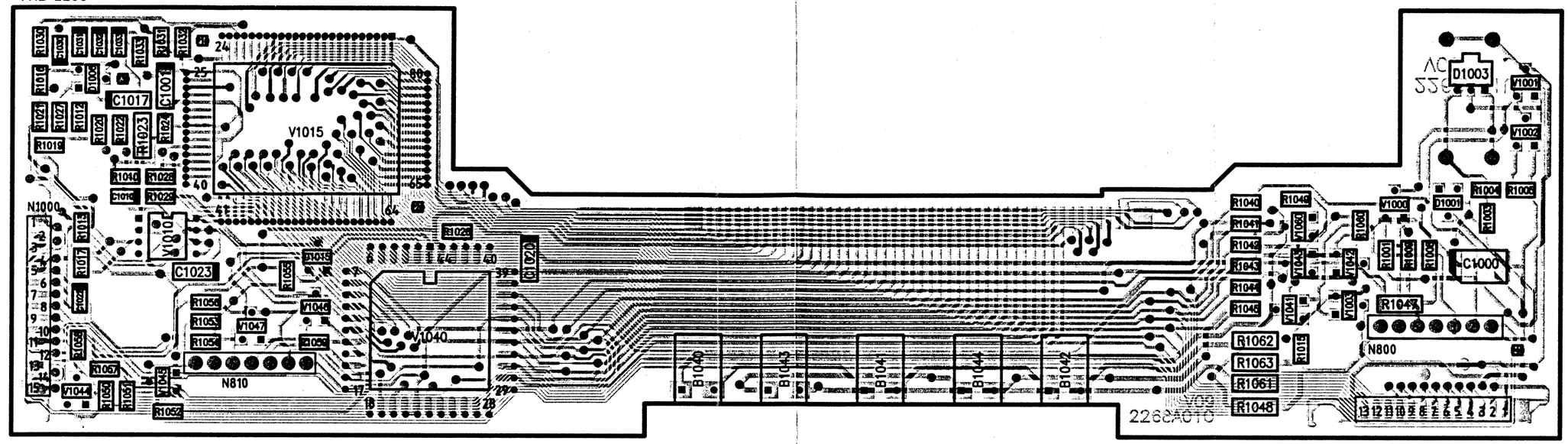


VKD 2268

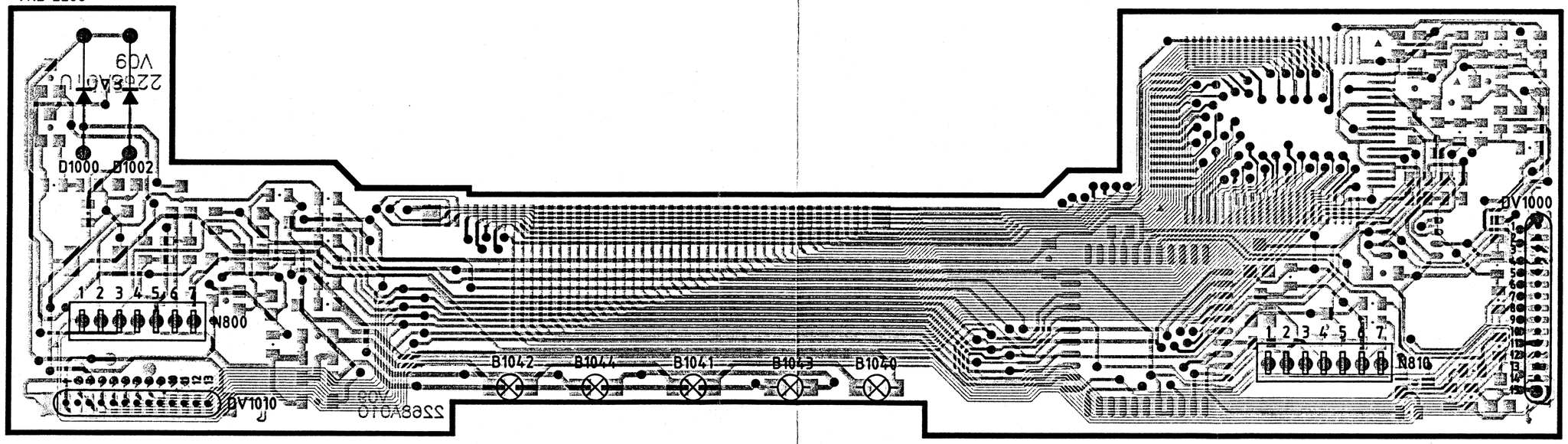


**N800**

1 = Code
2 = U5
3 = Bel.-
4 = Bel.+
5 = U14
6 = Masse
7 = U8

**DV1010**

| | |
|---|---|
| 1 = Masse | 8 = Scan5 |
| 2 = Strobe 3 | 9 = Scan6 |
| 3 = Strobe 4 | 10 = Bel. 3 |
| 4 = Scan1 | 11 = Bel. 4 |
| 5 = Scan2 | 12 = Bel. 3 |
| 6 = Scan3 | 13 = Bel. 4 |
| 7 = Scan4 | |

**N810**

1 = CL
2 = Masse
3 = Scan
4 = DA
5 = Reset
6 = SCL
7 = SDA

**DV1000**

| | |
|---|---|
| 1 = Masse | 9 = Scan6 |
| 2 = Strobe 1 | 10 = Code |
| 3 = Strobe 2 | 11 = Bel.- |
| 4 = Scan1 | 12 = Bel. 3 |
| 5 = Scan2 | 13 = Bel. 4 |
| 6 = Scan3 | 14 = Bel. 3 |
| 7 = Scan4 | 15 = Bel. 4 |
| 8 = Scan5 | |

VKD 2266

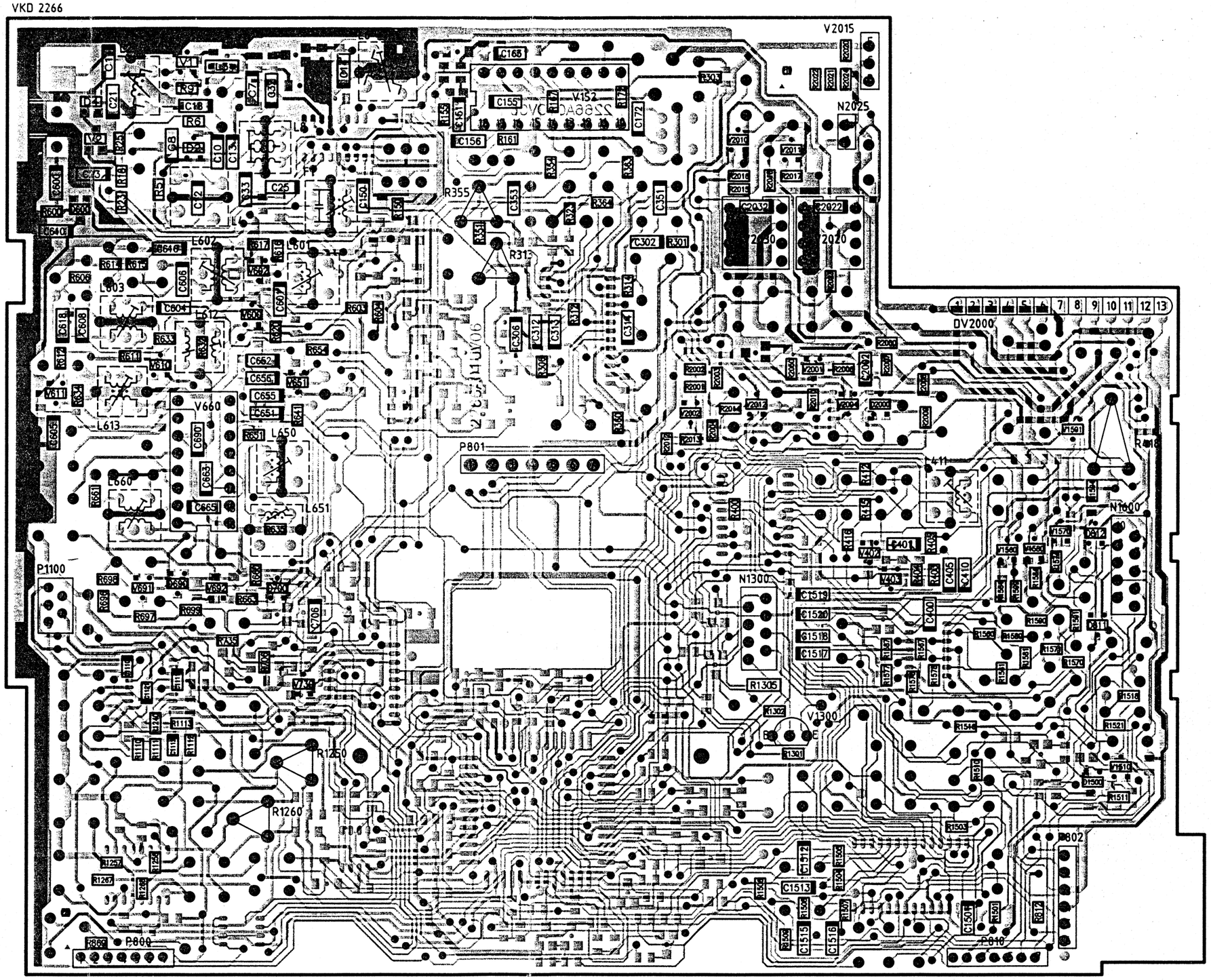
V2015
N2025
V152
R355
R313
V2020
DV2000
P801
V660
L613
L650
L651
L660
P1100
N1300
N1600
V1300
R1305
R1250
R1260
P800
P802
P810

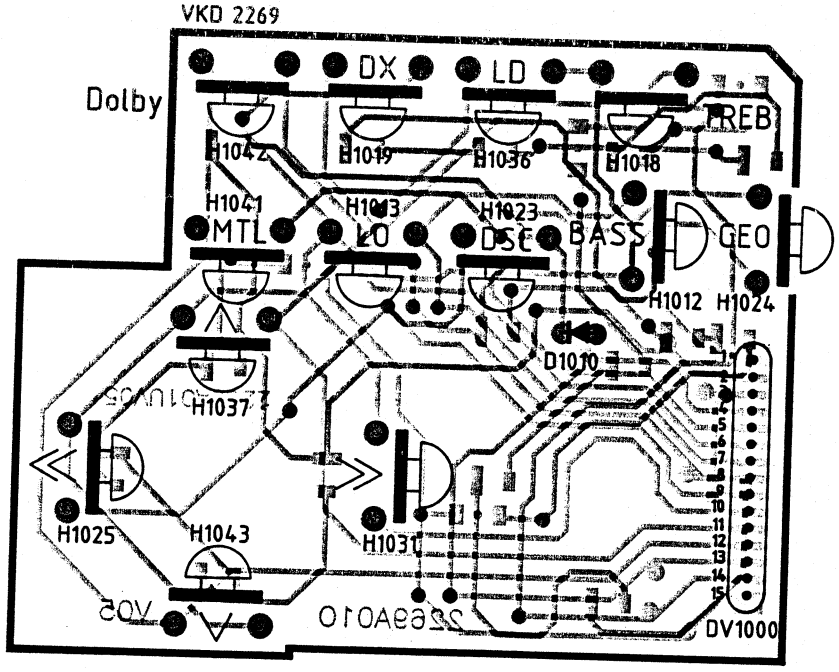
VKD 2269
Dolby
DX
LD
FREB
H1042
H1019
H1036
H1018
H1041
H1003
H1023
MTL
LO
DSE
BASS
GEO
H1012
H1024
D1010
H1037
H1025
H1043
H1031
DV1000

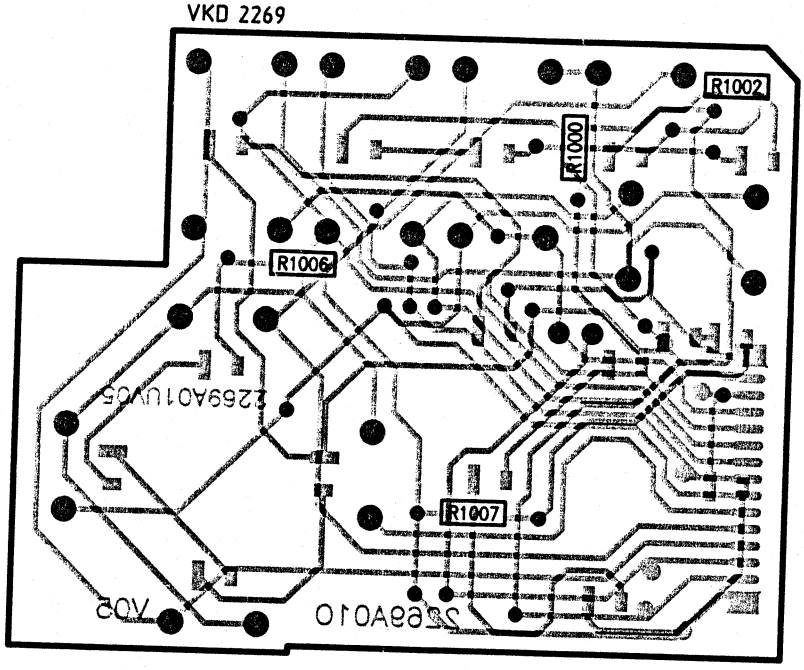
VKD 2269
R1002
R1000
R1006
R1007

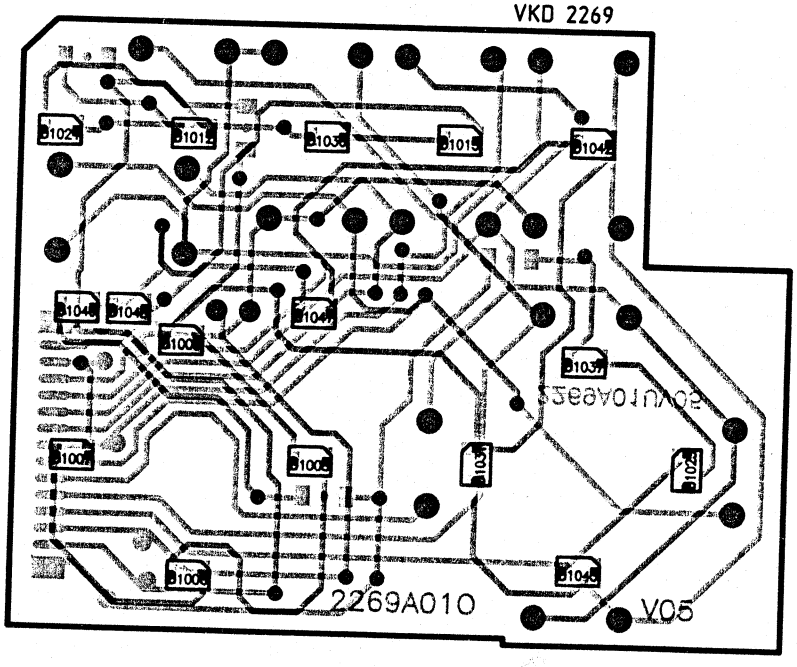
VKD 2269
2269A010
V05

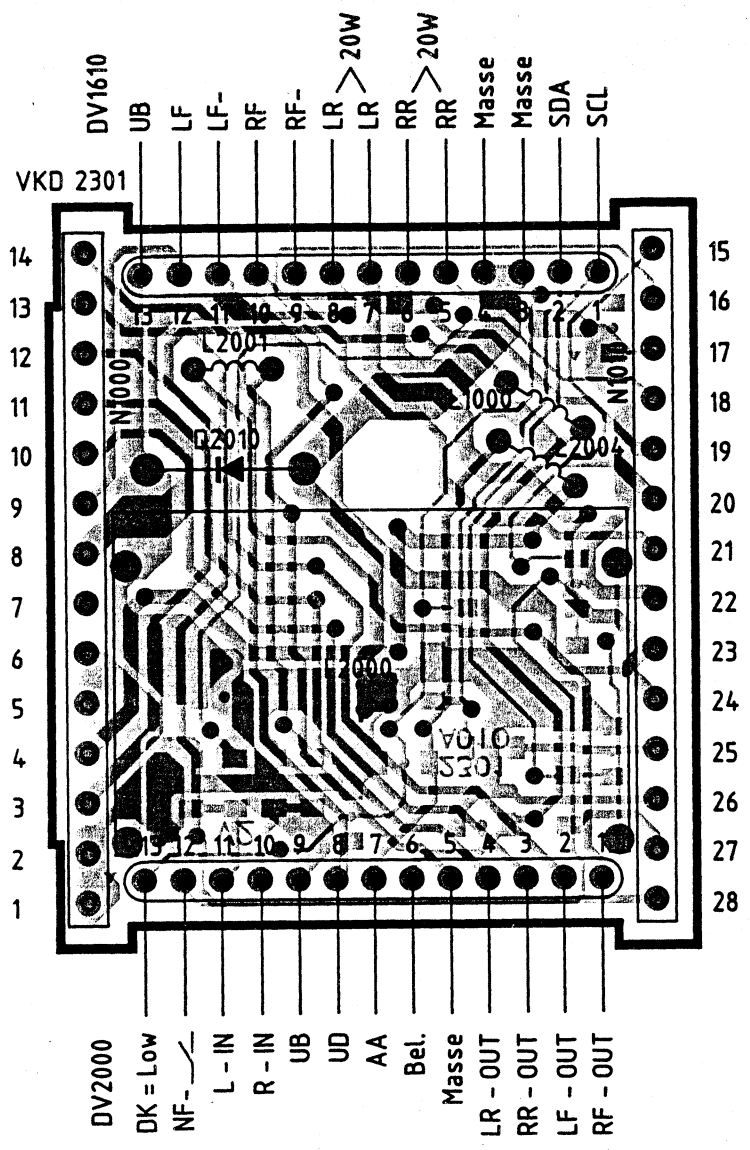


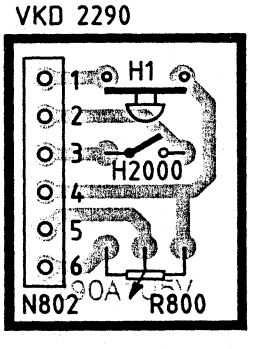


N802

1 = Scan
2 = ← U14
3 = UB →
4 = Masse
5 = Lautstärke
6 = U5

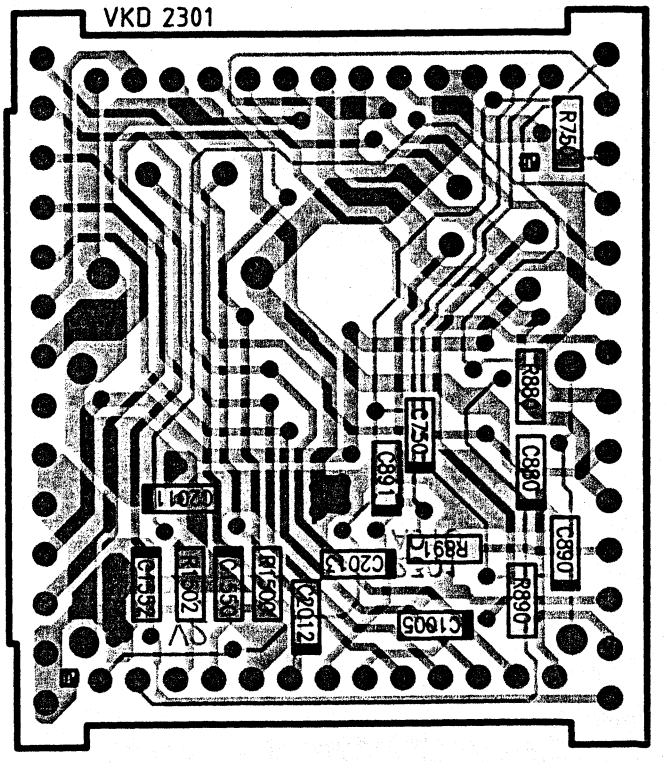

FM

FM-ZF-DEM

CODE LED

ARI

KEY-CARD

AM

AM-ZF

PLL

LCD-TREIBERPLATTE

N1011 LCD-ANZEIGE

FELDSTEUERKE (V0800/23)

FELDST.-FM (V0800/1)

MPX (C400/AR1)

FM-OSZ. (V700/10)

SL-BITOR (V800/48)

FELDST.-FM

MPX

FM-L (V1500/12)

FM-R (V1500/8)

ZWRAGSMONO (V1500/37)

CODE EIN (V800/33)

CODE-LED (P/N800-1)

MPX (V1152/4)

DK (V800/35)

RESET (V2000/6)

CARD EIN (V2002/8)

LAUTST. (CDI402/5)

CPS (V1205/1)

FELDSTEUERKE (C493)

BEEP (C695)

CARD (V2000/2)

WT (V1300/10)

CLOCK (V700/18)

DK

BK/SK

U-FM (R710)

U-AM (R702)

FELDST.-AM (R3633)

BEEP-MUTE (V0800/36)

BEEP (V0800/20)

BEEP + AM-NF (V1500/10)

SCL (V800/45)

SDA (V800/46)

CLOCK (V800/17)

DOLBYSH (V1250/52)

DK-DOLBYSH (CD2000/13)

FM-OSZ. (V3/3)

U-FM (R1)

U-AM (R650)

AM-OSZ.

PL 20
2266

PL 41
2268

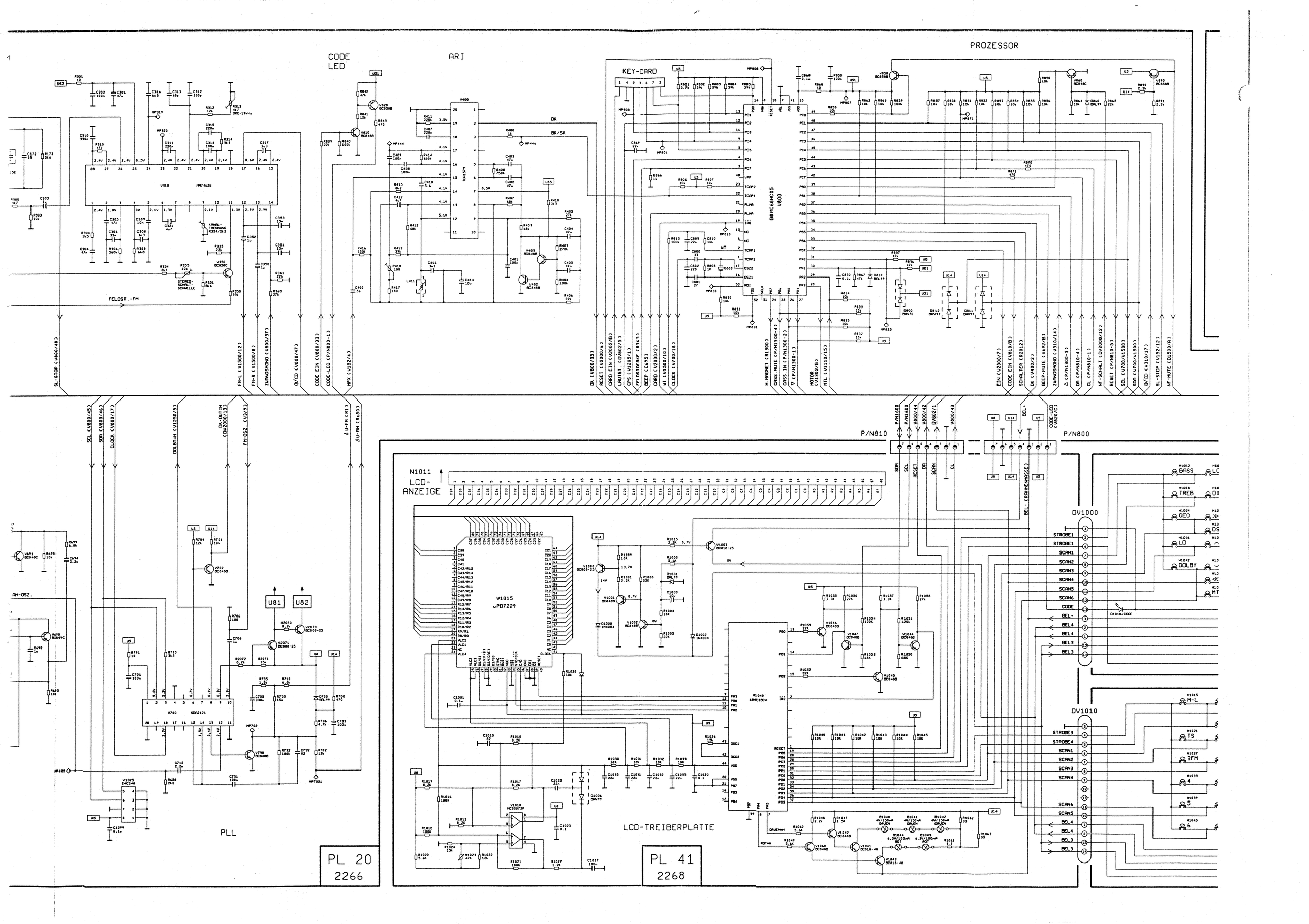

CODE LED
ARI
KEY-CARD
PROZESSOR
FELDST.-FM
P/N810
P/N800
N1011
LCD-ANZEIGE
V1015
uPD7229
DV1000
DV1010
LCD-TREIBERPLATTE
PLL
PL 20
2266
PL 41
2268

PROZESSOR

LW14

-NF

DOLBY

DV802

PL 12
2290

CPS

P/N1100

P/N1300

P/N810

P/N800

DV1000

DV1010

PL 47-1
2269

PL 47-2
2270

BASS
LO
TREB
DX
GEO
DSC
LD
MTL
DOLBY

M-L
RM
PS
TS
SRC
3FM
CPS
3
4
2
5
1
6

MUTE=H

V1590

| | |
|---|---|
| 1-3 | 4,1V |
| 5-7 | 4,1V |
| 8-10 | 4,1V |
| 12-14 | 4,1V |

PL 12
2290

POWER SUPPLY

CASS.
DV2025

PL 74-1
2301

PL
74-2

DV2000

DV1600

PL 10
2267

P/N1600

I
R (LINE IN)
L (LINE IN)
NF (=H)
ARI-DK (=H)
NF-MASSE
RF
RR
LF
LR
LINE OUT

II
RR+
RR-
RF+
RF-
LF+
LF-
LR+
LR-

III
SDA
SCL
DIG. MASSE
UD (+12V)
UB +12V
(SERVICE +14V)

| V1590 | |
|---|---|
| 1-3 | 4.1V |
| 5-7 | 4.1V |
| 8-10 | 4.1V |
| 12-14 | 4.1V |

VKD 2266

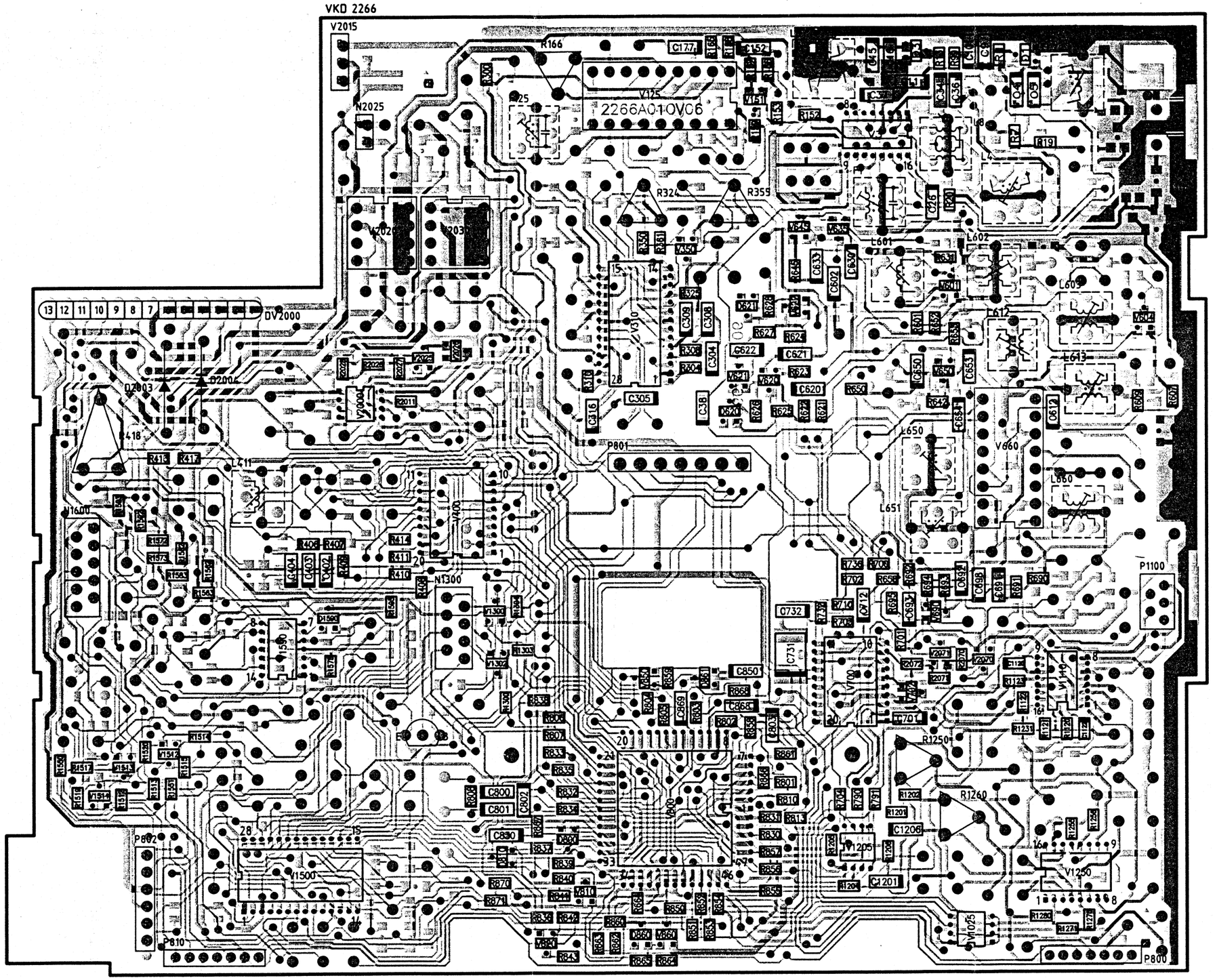
V2015
N2025
R166
C177
V125
2266A01OV06
R324
R359
V2020
V2030
V2035
DV2000
D2003
D2004
R418
R417
R416
L411
V1600
N1300
V1500
P801
P802
P810
C305
C316
C800
C801
C802
C830
C850
C869
V310
V400
V800
V810
V860
V1025
C732
C731
V700
V712
R1250
R1260
C1206
C1201
V1205
V1250
P1100
P800
L601
L602
L603
L612
L613
L650
L651
V660
L660

VKD 2266

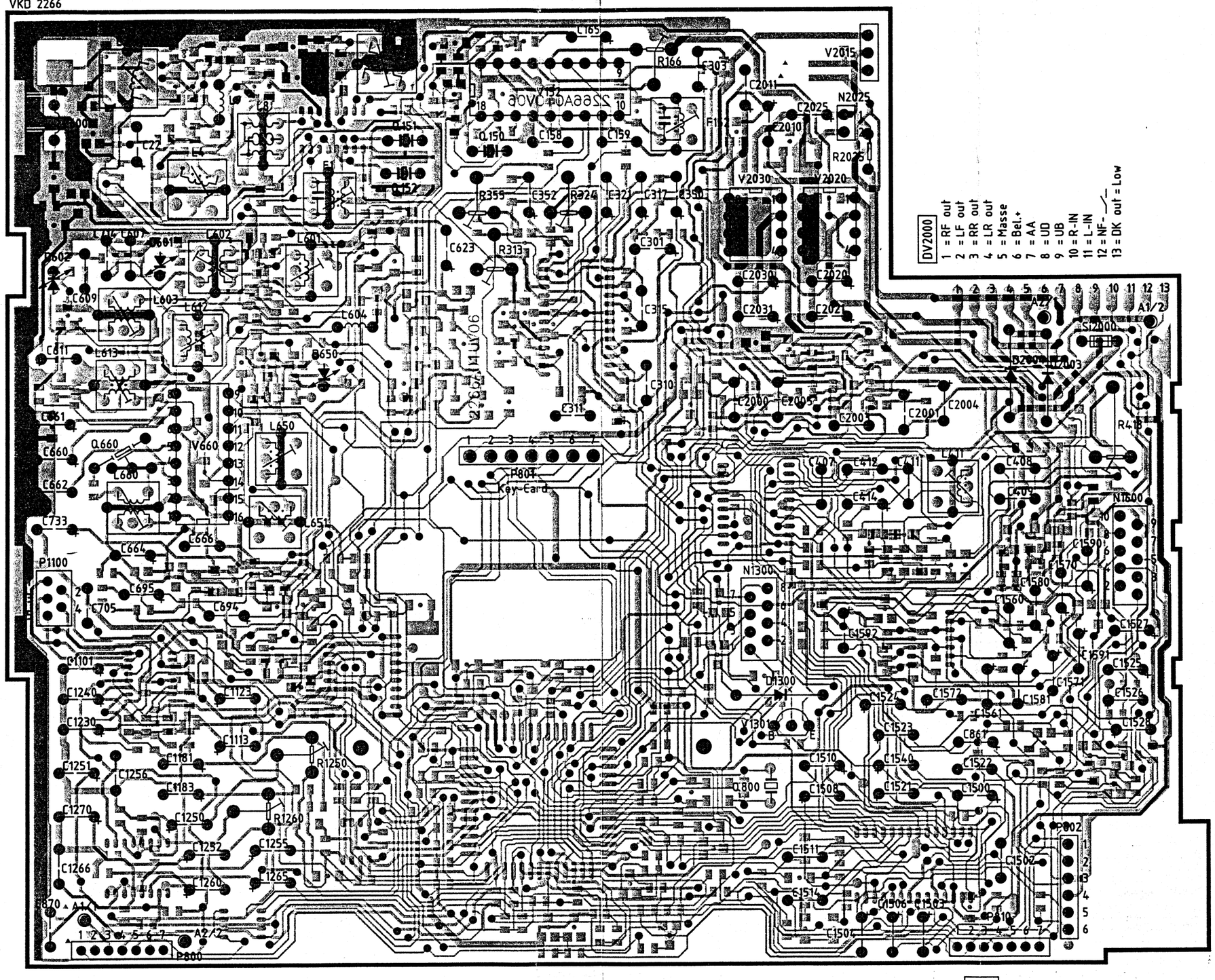
DV2000
1 = RF out
2 = LF out
3 = RR out
4 = LR out
5 = Masse
6 = Bel.+
7 = AA
8 = UD
9 = UB
10 = R-IN
11 = L-IN
12 = NF- ⎍⎍
13 = DK out = Low
P801
1 = Card on
P1100
1 = L normal
2 = R normal
3 = R reverse
4 = L reverse
5 = Gemeinsamer
N1600
1 =
2 = LF
3 = RF
4 = LR
5 = RR
6 = Masse
7 = U14
8 = SDA
9 = SCL
N1300
1 = LR1
2 = ∞/⏚
3 = LR2
4 = FF/FR
5 = Masse
6 = U14
7 = HM
8 = Motor
P802
1 = Scan
2 = ⟵ U14
3 = UB ⟶
4 = Masse
5 = Lautstärke
6 = U5
P800
1 = Code
2 = U5
3 = Bel.-
4 = Bel.+
5 = U14
6 = Masse
7 = U8
P810
1 = CL
2 = Masse
3 = Scan
4 = DA
5 = Reset
6 = SCL
7 = SDA

**BLAUPUNKT AUTORADIO**

BOSCH Telecom

**7 641 470 512**

# Ersatzteilliste

## Spare Parts List
## Liste de rechanges
## Lista de repuestos

**Mini 14**

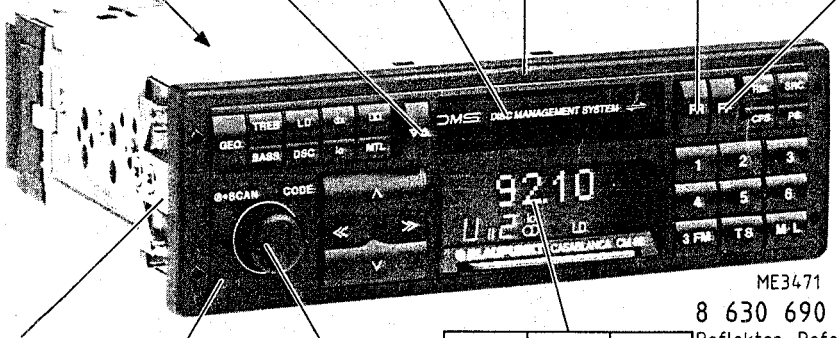


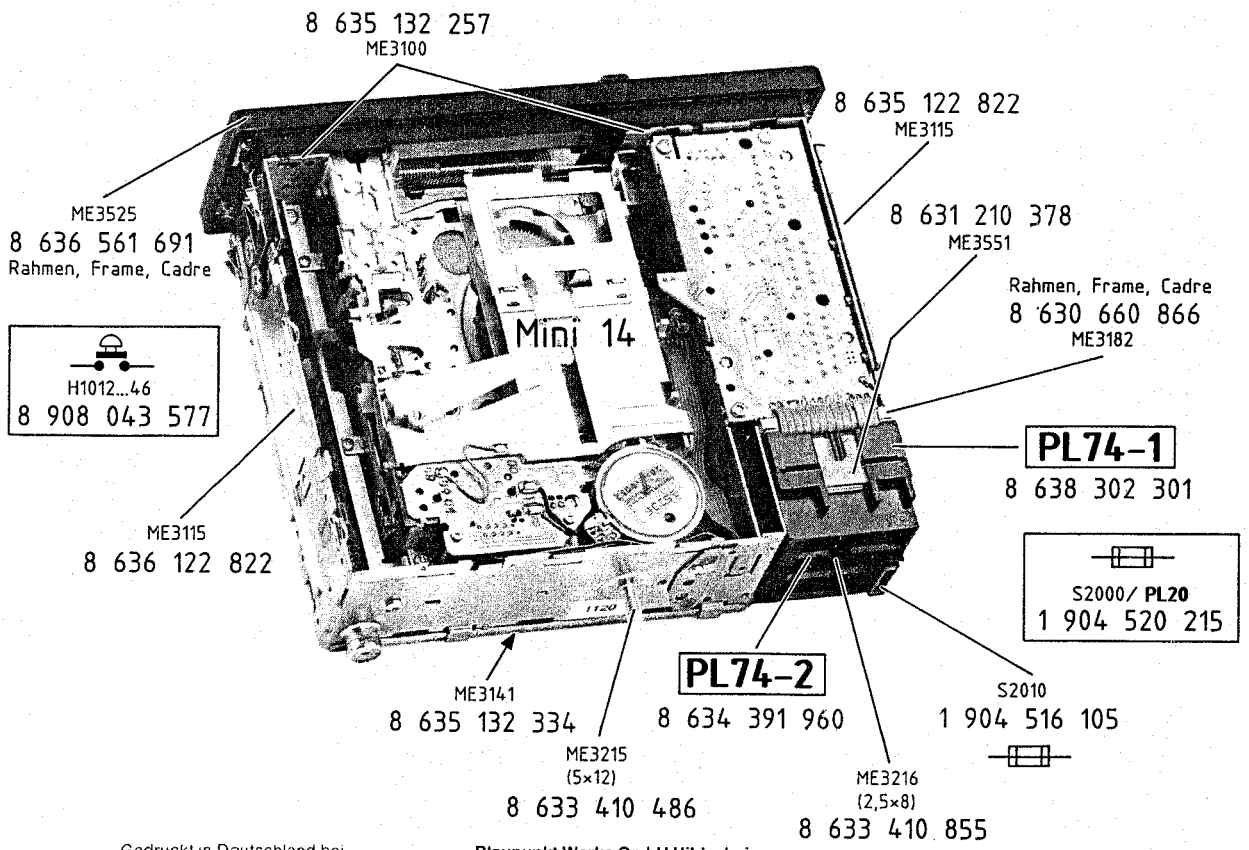



Gedruckt in Deutschland bei MC 1/HDR · Änderungen vorbehalten

Printed in Germany by MC 1/HDR · Subjects to alterations

**Blaupunkt Werke GmbH Hildesheim**
**Bosch Telecom**
**3D 92 340 004**
**2/92**
**Wt**

Imprimé en Allemagne par MC 1/HDR · Sous réserve de modifications

Impreso en Alemania por MC 1/HDR · Modificaciones reservadas

| | | | | | | |
|---|---|---|---|---|---|---|
| LW | 2 | Schacht | Cassette tray | Logement cassette | Compartimiento casete | 8 631 312 594 |
| | 3 | Hebel | Cassette catcher | Levier | Palanca | 8 631 990 493 |
| | 4 | Hebel | Toggle lever | Levier | Palanca | 8 631 960 272 |
| | 5 | Halter | Cassette tray holder | Support | Soporte | 8 631 960 208 |
| | M 1300 | Motor | Motor | Moteur | Motor | 8 637 250 042 |
| | 7 | Träger | Carrier | Porteur | Portador | 3 631 010 302 |
| | 8 | Schraube 2,6x2,5 | Screw 2.6x2.5 | Vis 2,6x2,5 | Tornillo 2,6x2,5 | 8 633 410 700 |
| | 9 | Wickelteller (2) | Spindle (2) | Plateau de bobinage (2) | Plato de bobinar (2) | 8 636 391 062 |
| | 10 | Mitnehmer vollst. | Cam, compl. | Entraîneur compl. | Pitón de arrastre compl. | 8 630 190 002 |
| | 11 | Scheibe (2) | Washer (2) | Rondelle (2) | Arandela (2) | 8 630 110 703 |
| | 12 | Scheibe (2) | Washer (2) | Rondelle (2) | Arandela (2) | 8 630 160 258 |
| | 13 | Feder | Spring | Ressort | Muelle | 8 634 640 164 |
| | 14 | Hebel | Lever | Levier | Palanca | 8 631 960 271 |
| | 15 | Schieber | Slider | Curseur | Cursor | 8 631 910 360 |
| | 17 | Anker | Rotor | Induit | Inducido | 8 631 910 368 |
| | 18 | Halter | Cassette tray holder | Support | Soporte | 8 631 990 544 |
| | 19 | Scheibe | Washer | Rondelle | Arandela | 8 630 160 043 |
| | 20a | Scheibe | | | | 8 630 160 072 |
| | 20 | Schaltnocken | Trigger cam | Came du contacteur | Leva de conexión | 8 632 260 031 |
| | 21 | Feder | Spring | Ressort | Muelle | 8 634 630 179 |
| | 22 | Auswerfer vollst. | Ejector, compl. | Ejecteur compl. | Expulsor compl. | 8 631 391 040 |
| | 23 | Auswerfer | Ejector | Ejecteur | Expulsor | 8 631 391 039 |
| | 24 | Tastenführung | Key guide | Guidage de touches | Guía de teclas | 8 631 010 286 |
| | 25 | Schieber SR | Slider FR | Curseur FR | Cursor RR | 8 631 090 242 |
| | 26 | Schieber SV | Slider FF | Curseur FF | Cursor AR | 8 631 090 243 |
| | 27 | Schieber | Slider | Curseur | Cursor | 8 631 010 326 |
| | 28 | Klappe | Lid | Clapet | Chapaleta | 8 631 010 283 |
| | 29 | Feder | Spring | Ressort | Muelle | 8 634 640 166 |
| | 30 | Hebel | Lever | Levier | Palanca | 8 631 960 215 |
| | 31 | Feder SV/SR | Spring FR/FF | Ressort FR/FF | Muelle AR/RR | 8 634 650 147 |
| | 32 | Sperrklinke | Ratchet | Cliquet | Trinquete | 8 631 910 431 |
| | 33 | Andruckrolle | Pressure roller | Galet presseur | Rodillo de presión | 8 631 391 018 |
| | 34 | Andruckrolle | Pressure roller | Galet presseur | Rodillo de presión | 8 631 391 019 |
| | 35 | Träger | Carrier | Porteur | Portadora | 8 631 990 549 |
| | 36 | Hebel | Lever | Levier | Palanca | 8 631 990 479 |
| | 37 | Feder | Spring | Ressort | Muelle | 8 634 620 124 |
| | 38 | Feder (Tonkopf) | Spring (Tape head) | Ressort (Tête de lecture) | Muelle (Cabeza de sonido) | 8 631 210 332 |
| LW | 39 | Bolzen (2) | Bolt (2) | Boulon (2) | Bulón (2) | 8 633 430 052 |
| | K 1200 | Tonkopf | Tape head | Tête de lecture | Cabeza de sonido | 8 637 698 075 |
| | 41 | Scheibe | Washer | Rondelle | Arandela | 2 916 080 905 |
| | 42 | Spule | Coil | Bobine | Bobina | 8 634 291 001 |
| | 43 | Feder | Spring | Ressort | Muelle | 8 634 640 184 |
| | 44 | Feder | Spring | Ressort | Muelle | 8 634 650 121 |
| | 45 | Schieber | Slider | Curseur | Cursor | 8 631 990 492 |
| | 46 | Feder SV | Spring SV | Ressort AR | Muelle AR | 8 634 640 178 |
| | 47 | Feder | Spring | Ressort | Muelle | 8 634 640 170 |
| | 48 | Hebel | Lever | Levier | Palanca | 8 631 990 523 |
| | 49 | Hebel | Lever | Levier | Palanca | 8 631 990 524 |
| | 50 | Riemen | Belt | Courroie | Correa | 8 634 730 100 |
| | 51 | Schwungscheibe (2) | Flywheel (2) | Disque volant (2) | Disco volante (2) | 8 636 690 150 |
| | 52 | Rolle | Pulley | Galet | Rodillo | 8 636 660 229 |
| | 53 | Zwischenrad | Interm. gear wheel | Roue interm. | Rueda interm. | 8 636 361 157 |
| | 54 | Schieber | Slider | Curseur | Cursor | 8 631 010 325 |
| | 55 | Hebel | Lever | Levier | Palanca | 8 631 960 255 |
| | 56 | Exzenterrad | Eccentric wheel | Roue à excentrique | Rueda excéntrica | 8 636 361 156 |
| | 57 | Hebel | Lever | Levier | Palanca | 8 631 910 231 |
| | 58 | Schaltrad | Ratchet wheel | Roue de commande | Rueda de cambio | 8 636 361 158 |
| | 59 | Feder (2) | Spring (2) | Ressort (2) | Muelle (2) | 8 634 620 129 |
| | 60 | Zahnradhebel | Gear wheel lever | Levier à roue dentée | Palanca por rueda dentada | 8 631 990 488 |
| | 61 | Hebel | Lever | Levier | Palanca | 8 631 960 242 |
| | 62 | Hebel | Lever | Levier | Palanca | 8 631 960 239 |
| | 63 | Feder | Spring | Ressort | Muelle | 8 634 650 129 |
| | 64 | Andruckfeder | Pressure spring | Ressort de pression | Muelle de presion | 8 634 620 127 |
| | 68 | Andruckfeder | Pressure spring | Ressort de pression | Muelle de presion | 8 634 620 135 |
| | 65 | Feder | Spring | Ressort | Muelle | 8 634 640 154 |
| | 66 | Hebel | Lever | Levier | Palanca | 8 631 360 056 |
| | 67 | Zwischenhebel | Interm. lever | Levier interm. | Palanca interm | 8 631 960 210 |
| | 80 | Feder | Spring | Ressort | Muelle | 8 634 620 139 |
| | 81 | Schraube | Screw | Vis | Tornillo | 8 633 410 582 |
| | 100 | Schraube (2,5x6) | Screw (2.5x6) | Vis (2,5x6) | Tornillo (2,5x6) | 8 633 410 572 |
| | 101 | Schraube (2x4) | Screw (2x4) | Vis (2x4) | Tornillo (2x4) | 8 633 410 734 |
| | 102 | Schraube (2x8) | Screw (2x8) | Vis (2x8) | Tornillo (2x8) | 8 633 410 738 |
| LW | 103 | Schraube | Screw | Vis | Tornillo | 8 633 410 701 |
| | H 1200 | Schalter | Switch | Commutateur | Commutador | 8 634 310 659 |
| | PL51 | Platte für Schalter | Plate | Plaque | Placa | 8 638 303 466 |

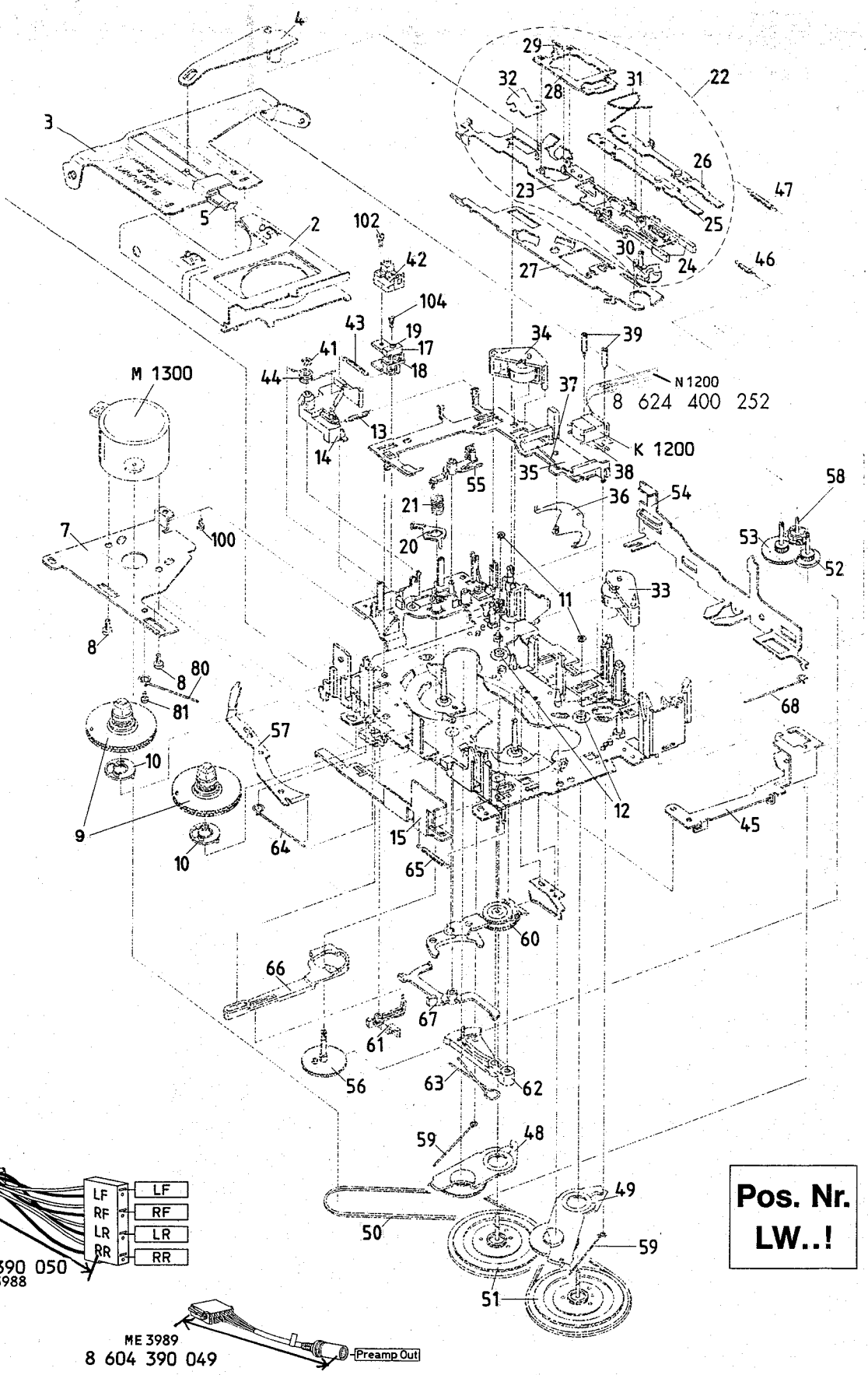
M 1300
N 1200
8 624 400 252
K 1200
Pos. Nr.
LW..!
LF
RF
LR
RR
8 604 390 050
ME 3988
ME 3989
8 604 390 049
Preamp Out
+12V
+12V
per.+12V
8 604 390 045
ME 3987
ME 3992
8 600 660 019
ME 3993
8 908 603 224

| | | | | | |
|---|---|---|---|---|---|
| ME 3125 | Chassisblech (Key card) | Chassis plate | Tole chassis | Chapa chassis | 8 638 040 214 |
| ME 3211 | Torx.-Schraube (2x) | Torx.-screw | Torx.-vis | Tornillo-Torx. | 8 633 410 757 |
| ME 3217 | Zugfeder (2x) | *Spring* | Ressort | Muelle | 8 634 640 228 |
| ME 3250 | Schalthebel | Lever | Levier | Palanca | 8 631 910 437 |
| ME 3385 | Führungsschlitten-Zunge | Guide rail | Glissiere | Guia-riel Key card-Zunge | 8 636 210 222 |
| ME 3358 | Buchsengehäuse | Jack Box | *Boitier de prise* | *Caja de casquillos* | 8 634 360 503 |
| ME 3210 | Drehfeder | *Torsion spring* | *Ressort de torsion* | Muelle de torsion | 8 634 650 140 |
| ME 3167 | Isoliereinlage | Insulator insert | Garniture isolante | Inserto aislamient | 8 631 058 627 |
| ME 3209 | Torx.-Schraube (4x) | Torx.-Screw | Torx.-Vis | *Tornillo torx* | 8 633 410 757 |
| ME 3280 | Demontagebügel (2x) | Dismantling aid | *Etrier de demont.* | *Estribo de desmont* | 8 610 910 002 |
| ME 4010 | Distanzbolzen | Spacer pin | Axe entretoise | Perno distan ciador | 8 603 160 002 |
| ME 4210 | Puffer | Buffer | Tampon | Tampon | 8 600 460 020 |
| ME 3471 | Reflektor (PL41) | Reflector | Reflecteur | Reflector | 8 630 690 283 |
| ME 3990 | Codekarte | Code card | Carte | Carta | 8 638 312 625 |
| ME 3991 | Codekarte | Code card | Carte | Carta | 8 638 312 626 |
| ME 3833 | Lampenfassung B1045 | Lamp socket | Doille de lampe | Portalampara | 8 908 533 133 |
| ME 3857 | Buchsenleiste P1600 | Female connector | Reglette de bornes | Regleta de bornes | 8 908 633 383 |
| ME 3866 | Steckerleiste N1300 | Plug strip | Riglette a fiches | Regleta de enchute | 8 908 613 117 |

| | | |
|---|---|---|
| D 1 | BB 814 | 8 925 405 146 |
| D 2 | BB 814 | 8 925 405 146 |
| D 3 | BB 814 | 8 925 405 146 |
| D 4 | | 8 925 405 530 |
| D 600 | Z 47 | 8 925 810 005 |
| D 601 | BB 112 | 8 945 405 996 |
| D 602 | BB 112 | 8 945 405 996 |
| D 620 | BAL99 | 8 925 405 137 |
| D 621 | BAL99 | 8 925 405 137 |
| D 650 | BB 112 | 8 945 405 996 |
| D 690 | BAV 99 | 8 925 405 124 |
| D 700 | BAL99 | 8 925 405 137 |
| D 800 | BAV 70 | 8 905 407 033 |
| D 810 | BAL99 | 8 925 405 137 |
| D 811 | BAV 99 | 8 925 405 124 |
| D 812 | BAV 99 | 8 925 405 124 |
| D 860 | BAL99 | 8 925 405 137 |
| D1000 | 1N 4004 | 8 905 405 794 |
| D1001 | BAL99 | 8 925 405 137 |
| D1002 | 1N 4004 | 8 905 405 794 |
| D1006 | BAV 99 | 8 925 405 124 |
| D1006 | CL150Y-CDT | 8 925 405 169 |
| D1007 | CL150Y-CDT | 8 925 405 169 |
| D1008 | CL150Y-CDT | 8 925 405 169 |
| D1009 | CL150Y-CDT | 8 925 405 169 |
| D1010 | TLR 226 | 8 905 405 416 |
| D1012 | CL150Y-CDT | 8 925 405 169 |
| D1013 | CL150Y-CDT | 8 925 405 169 |
| D1014 | CL150Y-CDT | 8 925 405 169 |

| | | |
|---|---|---|
| D1015 | BAL99 | 8 925 405 137 |
| D1015 | 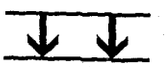 | 8 925 405 169 |
| D1050 | | 8 925 405 169 |
| D1300 | 1N 4001 | 8 925 405 819 |
| D1500 | BAV 70 | 8 905 407 033 |
| D1590 | BAL99 | 8 925 405 137 |
| D2000 | BAL99 | 8 925 405 137 |
| D2003 | 1N 4004 | 8 905 405 794 |
| D2004 | 1N 4004 | 8 905 405 794 |
| D2010 | BYW95B | 8 945 405 203 |
| D2099 | BZX 55/C5V1 | 8 905 421 272 |

| | | |
|---|---|---|
| V 1 | BF 999 | 8 925 705 280 |
| V 2 | BC 858 C | 8 925 705 039 |
| V 3 | TDA 1575T | 8 925 900 334 |
| V 151 | BF 550 | 8 925 706 161 |
| V 152 | TDA 1596 | 8 945 901 731 |
| V 310 | AN 7465 | 8 925 900 230 |
| V 350 | BC 858 C | 8 925 705 039 |
| V 400 | TDA 1579 | 8 925 900 141 |
| V 402 | BC 848 B | 8 925 705 043 |
| V 403 | BC 848 B | 8 925 705 043 |
| V 600 | ON 4288 | 8 925 705 115 |
| V 601 | BC 848 C | 8 925 705 139 |
| V 602 | BC 858 C | 8 925 705 141 |
| V 604 | BFR 30 | 8 925 705 131 |
| V 610 | BC 848 C | 8 925 705 139 |
| V 611 | BC 848 C | 8 925 705 139 |
| V 620 | BFS19L | 8 925 705 282 |
| V 621 | BC 858 C | 8 925 705 039 |
| V 622 | BC 858 C | 8 925 705 039 |

**Hinweis:**

Handelsübliche Kondensatoren und Widerstände sind in der Ersatzteilliste nicht aufgeführt. Wir bitten Sie, diese Teile im Fachhandel zu beziehen.

**Note:**

Commercially available capacitors and resistors are not mentioned in the spare parts list. Kindly buy these parts from the specialized trade.

**Nota:**

Des condensateurs et résistances commerciaux ne sont pas inclus dans la liste des pièces détachées. Veuillez acheter ces pièces chez votre spècialiste.

**Nota:**

No se indican en la lista de piezas de repuestos los condensatores y los resistores de uso comercial. Les rogamos comprar esas piezas en el comercio especializado.

| | | |
|---|---|---|
| V 635 | BC 848 B | 8 925 705 043 |
| V 645 | BC 848 B | 8 925 705 043 |
| V 650 | BC 848 C | 8 925 705 139 |
| V 651 | BC 848 C | 8 925 705 139 |
| V 660 | TDA 1072 | 8 945 900 394 |
| V 690 | BC 849 C | 8 925 705 035 |
| V 691 | BC 848 C | 8 925 705 139 |
| V 692 | BC 848 B | 8 925 705 043 |
| V 700 | SDA 2121 | 8 925 900 306 |
| V 702 | BC 848 B | 8 925 705 043 |
| V 730 | BC 848 B | 8 925 705 043 |
| V 800 | MC 68HC05B8 | 8 925 900 495 |
| V 810 | BC 848 B | 8 925 705 043 |
| V 820 | BC 858 B | 8 925 705 038 |
| V 850 | BC 858 B | 8 925 705 038 |
| V 860 | BC 848C | 8 925 705 037 |
| V 890 | BC 858 B | 8 925 705 038 |
| | | |
| V1000 | BC 808-25 | 8 925 705 042 |
| V1001 | BC 848 B | 8 925 705 043 |
| V1002 | BC 848 B | 8 925 705 043 |
| V1003 | BC 818-25 | 8 925 705 041 |
| V1010 | MC 33072D | 8 925 900 319 |
| V1015 | UPD 7229A | 8 925 900 312 |
| V1025 | 24C04 | 8 925 900 388 |
| V1040 | MC 68HC05C4 | 8 925 900 390 |
| V1041 | BC 818-40 | 8 925 705 228 |
| V1042 | BC 848 B | 8 925 705 043 |
| V1043 | BC 818-40 | 8 925 705 228 |
| V1044 | BC 848 B | 8 925 705 043 |
| V1045 | BC 848 B | 8 925 705 043 |
| V1046 | BC 848 B | 8 925 705 043 |
| V1047 | BC 848 B | 8 925 705 043 |
| V1060 | BC 848 B | 8 925 705 043 |
| V1110 | TA 7705F | 8 925 900 012 |

| | | |
|---|---|---|
| V1111 | BC 848 B | 8 925 705 043 |
| V1112 | BC 848 B | 8 925 705 043 |
| V1205 | RC 4558 | 8 925 900 308 |
| V1250 | HA 12135 | 8 925 900 229 |
| V1300 | BC 818-40 | 8 925 705 228 |
| V1301 | BC 369 | 8 925 705 305 |
| V1302 | BC 848 B | 8 925 705 043 |
| V1500 | TDA 7318 | 8 925 900 349 |
| V1510 | BC 848 B | 8 925 705 043 |
| V1511 | BC 848 B | 8 925 705 043 |
| V1512 | BC 848 B | 8 925 705 043 |
| V1513 | BC 848 B | 8 925 705 043 |
| V1560 | BC 818-25 | 8 925 705 041 |
| V1570 | BC 818-25 | 8 925 705 041 |
| V1580 | BC 818-25 | 8 925 705 041 |
| V1590 | MC 330-79 | 8 925 900 205 |
| V1591 | BC 818-25 | 8 925 705 041 |
| V1600 | TDA 7350 | 8 945 902 218 |
| V1601 | TDA 7350 | 8 945 902 218 |
| V1602 | TDA 7350 | 8 945 902 218 |
| V1605 | BC 558 B | 8 925 707 475 |
| V2000 | L 4949D01 | 8 925 900 348 |
| V2001 | BC 848 B | 8 925 705 043 |
| V2002 | BC 858 C | 8 925 705 039 |
| V2004 | BC 848 B | 8 925 705 043 |
| V2010 | BC 858 B | 8 925 705 038 |
| V2011 | BC 848 B | 8 925 705 043 |
| V2012 | BC 848 B | 8 925 705 043 |
| V2015 | BD 436 | 8 945 705 606 |
| V2020 | L 4916 | 8 945 900 450 |
| V2025 | BC 848 B | 8 925 705 043 |
| V2026 | BC 848 B | 8 925 705 043 |
| V2030 | L 4916 | 8 945 900 450 |
| V2070 | BC 808-25 | 8 925 705 042 |
| V2071 | BC 808-25 | 8 925 705 042 |

| | | |
|---|---|---|
| R 166 | 100 k | 8 941 500 076 |
| R 313 | 4,7 k | 8 941 500 070 |
| R 324 | 2,2 k | 8 941 500 079 |
| R 355 | 10 k | 8 941 500 072 |
| R 418 | 100 Ohm | 8 941 510 020 |
| R1250 | 10 k | 8 941 500 072 |
| R1260 | 10 k | 8 941 500 072 |
| R1023 | | 8 951 300 003 |

| | | |
|---|---|---|
| B1040 | 4V/150MA | 8 928 411 546 |
| B1041 | 4V/150MA | 8 928 411 546 |
| B1042 | 4V/150MA | 8 928 411 546 |
| B1043 | 6,3V/100MA | 8 928 411 545 |
| B1044 | 6,3V/100MA | 8 928 411 545 |
| B1045 | 14V/85MA | 1 907 598 253 |

| | | |
|---|---|---|
| F 1 | | 8 948 417 022 |
| F 152 | | 8 948 417 023 |
| L 2 | 0,15UH | 8 948 419 031 |
| L 3 | 20R | 8 958 411 000 |
| L 4 | 0,1UH | 8 948 419 032 |
| L 6 | 0,086UH | 8 948 419 033 |
| L 8 | | 8 948 419 035 |
| L 9 | 3,3UH | 8 928 411 025 |
| L 411 | 2,36MH | 8 948 412 064 |
| L 600 | 4UH | 8 928 411 037 |
| L 601 | 4,7MH | 8 948 412 059 |
| L 602 | 210UH | 8 948 415 058 |
| L 603 | 246 UH | 8 948 415 057 |
| L 604 | 4,7UH | 8 928 411 008 |
| L 612 | 1,92MH | 8 948 412 060 |
| L 613 | 1,92MH | 8 948 412 061 |
| L 650 | 107 UH | 8 948 415 059 |
| L 651 | 38UH | 8 948 415 060 |
| L 660 | 37UH | 8 948 413 011 |
| L1000 | | 8 674 220 037 |
| L2000 | 260UH | 8 948 411 058 |
| L2001 | 100UH | 8 928 411 026 |
| L2004 | | 8 674 220 037 |

| | | |
|---|---|---|
| Q 150 | 10,7MHZ | 8 946 193 206 |
| Q 151 | 10,7MHZ | 8 946 193 206 |
| Q 152 | 10,7MHZ | 8 946 193 206 |
| Q 660 | 460 KHZ | 8 946 193 039 |
| Q 800 | 4 MHZ | 8 946 193 099 |